SCHAEFF

A YANMAR BRAND

MINI EXCAVATOR

TC16₂

HOW DO YOU START WITH A MINI AND MAKE A…

TC14₂

TC16₂

TC19₂

TC22₂

XL MINI EXCAVATOR

WHAT DOES A GOOD MINI EXCAVATOR MEAN TODAY?

Very simple: the ability to reliably do more.

With these new models, you mini-excavate in XL format: High digging forces, functional design, more room. Schaeff offers four models in the 1.5-2.0 ton segment. From the rental version to the high-end configuration for demanding construction site deployment. All equipped with high performance genes.

TRADITION MEETS PROGRESS

The Schaeff philosophy – conventional construction, Knickmatik™ cylinder and top-mounted cylinder – was retained. A completely new machine was constructed around these elements, from high performance brand components to the new driver's cab.

"MADE IN GERMANY"

Machine Engineering Made in Germany – this is our claim: The XL mini excavators are completely designed and built in our plant in Crailsheim, Germany.

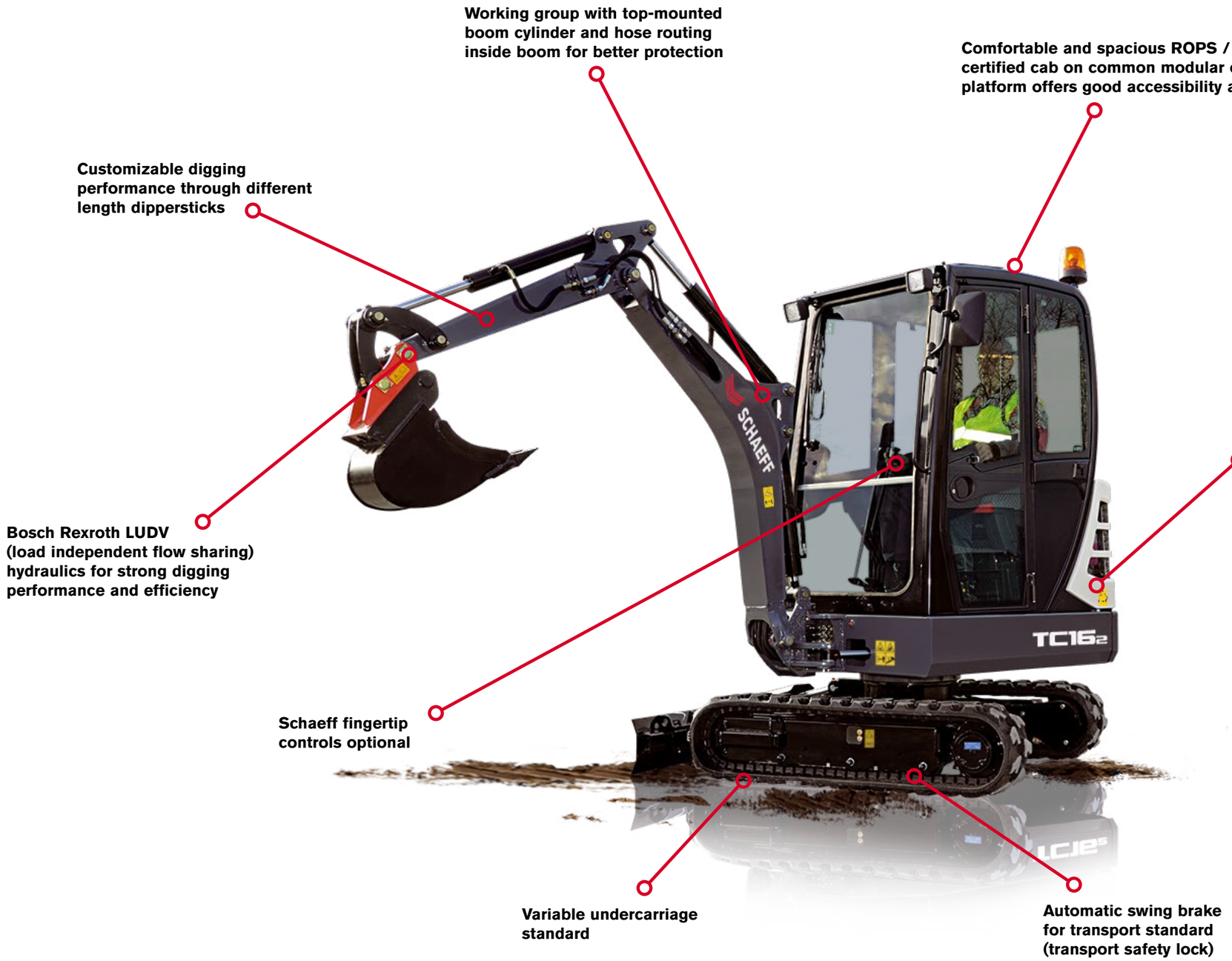
Working group with top-mounted boom cylinder and hose routing inside boom for better protection
Comfortable and spacious ROPS / TOPS certified cab on common modular operator platform offers good accessibility and visibility
Customizable digging performance through different length dippersticks
Wide opening engine hood offers good visibility and accessibility of daily service points
Bosch Rexroth LUDV (load independent flow sharing) hydraulics for strong digging performance and efficiency
Schaeff fingertip controls optional
Variable undercarriage standard
Automatic swing brake for transport standard (transport safety lock)
SCHAEFF
TC16₂

TC14₂

Operating weight kg Cab Canopy	 1610 1500
Machine width mm	990 - 1340
Engine power kW (hp) Engine manufacturer	10.4 (14.1) Kubota D 722
Max. digging depth m Standard dipperstick Long dipperstick	 2.26 -

EQUIPMENT

- Digging equipment: Dipperstick 950 mm
- LUDV hydraulics
- Cab version optional
- Automatic swing brake (transport security)
- Rubber track, 230 mm wide (short pitch)

TC16₂

	 1650 1570
	990 - 1340
	10.4 (14.1) Kubota D 722
	 2.26 2.46

EQUIPMENT

- Digging equipment:
  Dipperstick 950 mm standard
  Dipperstick 1150 mm optional
- LUDV hydraulics
- 1st and 2nd additional control circuit optional
- Hydraulically adjustable undercarriage optional
- Rubber track, 230 mm wide (short pitch)
- 2 travel speeds optional
- Automatic swing brake (transport security)

TC19₂

	 1840 1760
	990 - 1340
	12.0 (16.3) Kubota D 902
	 2.54 2.74

EQUIPMENT

- Digging equipment:
  Dipperstick 950 mm standard
  Dipperstick 1150 mm optional
- LUDV hydraulics
- Schaeff Fingertip Control optional
- 1st and 2nd additional control circuit optional
- Hydraulically adjustable undercarriage standard
- Automatic swing brake (transport security)
- Rubber track, 230 mm wide (short pitch)
- 2 travel speeds
- Comfort seat

TC22₂

	 2010 1930
	990 - 1340
	12.0 (16.3) Kubota D 902
	 2.54 2.74

EQUIPMENT

- Digging equipment:
  Dipperstick 950 mm standard
  Dipperstick 1150 mm optional
- LUDV hydraulics
- Schaeff Fingertip Control standard
- 1st additional control circuit standard
- 2nd additional control circuit optional
- Hydraulically adjustable undercarriage standard
- Automatic swing brake (transport security)
- Rubber track, 230 mm wide (short pitch)
- 2 travel speeds
- Comfort seat

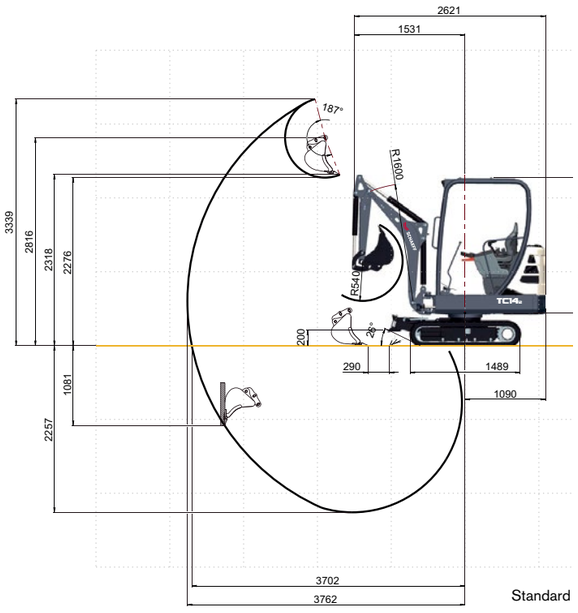

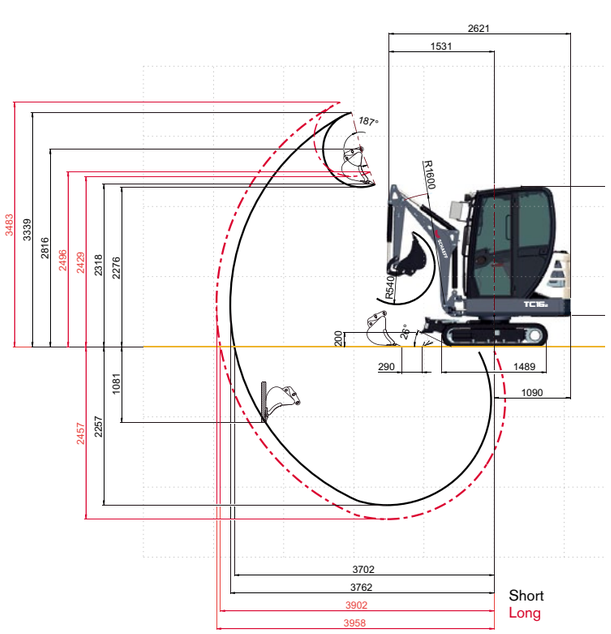

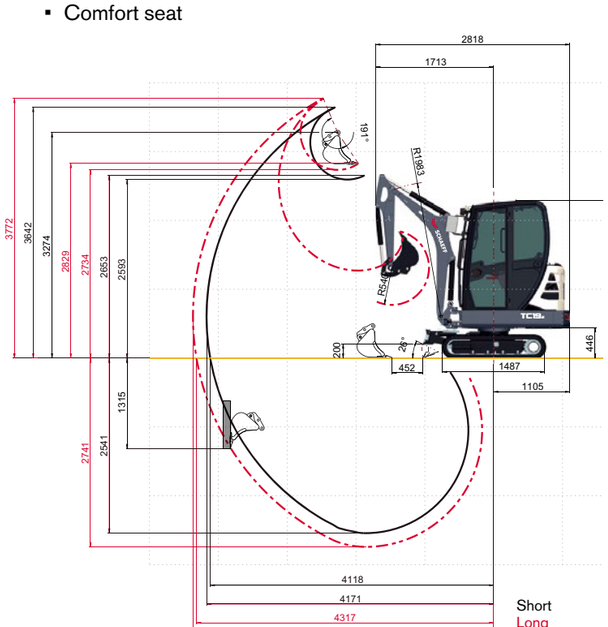

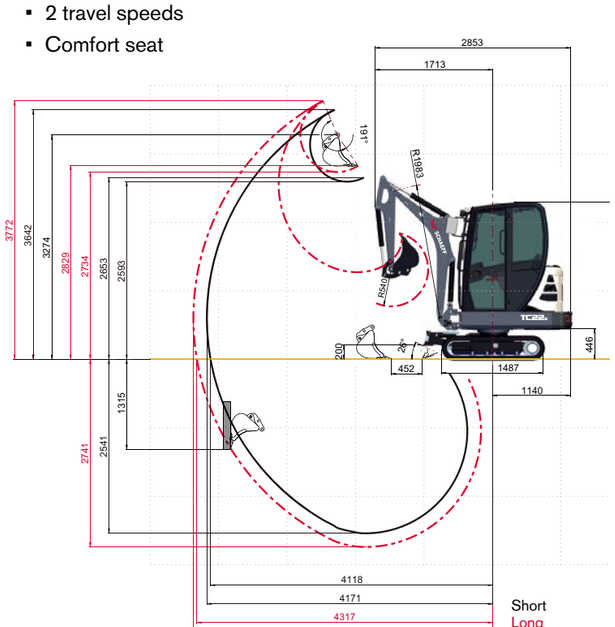

XL DIGGING PERFORMANCE

HOW DOES A PRODUCTIVE MACHINE COME INTO BEING?

Very simple: combine high-performance components with good ideas.

ENGINE AND HYDRAULIC SYSTEM

Compared to current competitors' models, the mini excavator offers an average 20 % more work capacity, for example, when quickly digging trenches.

The LUDV (load independent flow sharing) hydraulics is offered by only a few models in this class.
Even for extreme terrain, the bucket digs in powerfully and is completely filled.

SECOND ADDITIONAL CONTROL CIRCUIT

For precise operation of attachment tools, the second auxiliary control circuit is electrically proportional – optional from TC16-2 and upward. The driver exerts extremely precise control via a joystick (Schaeff Fingertip Control) – one special feature that is normally seen only in excavators of a higher class.

SCHAEFF KNICKMATIK®

The Schaeff Knickmatik® with adjustable articulated boom system is ideal for working along walls or embankments.
The total articulation angle is an impressive 120°.
The swing cylinder does not project over the track and so is protected from damage.

SCHAEFF FINGERTIP CONTROL

With the Schaeff Fingertip Control, the electrically proportional actuation of the hydraulic functions is extremely simple with a thumb wheel on the joystick. With it, the operator can precisely regulate the oil flow from "zero" to "full", an advantage when controlling the attachment devices such as clamshell buckets or swing buckets. Also available on the right joystick for the first control circuit and on the left joystick for the second control circuit.

CRAWLER UNIT

The undercarriage is adjustable from 990 to 1340 mm.
This guarantees full mobility on construction sites with narrow passageways/gates and offers exceptional stability on difficult terrain.

XL WORKSTATION

HOW CAN PERFORMANCE BE INCREASED INDEPENDENTLY FROM TECHNOLOGY?

Very simple: with a workplace that makes the driver better.

ROOMY CAB

The new XL cab (ROPS/TOPS-certified) offers room and comfort like the “big ones”. For quick entry, the console can be raised for more space to get in the cab. The footwell offers place enough – even for shoe sizes 15 and larger. In general, the workplace can be individually arranged to the size of the driver. The large glass area allows optimal visibility of the attachment tools and the work environment.

For optimal communication on the construction site, the right window can be opened to floor level.

Canopy version

The machines are also available in canopy versions. With safety equipment such as the lockable storage compartment.

XL EASE OF USE

WHAT DOES “USER-FRIENDLY” MEAN?

Very simple: the combination of intuitive control and safe working.

WELL PROTECTED

With Schaeff-specific construction features, damage is avoided right from the start: Because of the upper position of the top-mounted cylinder, there is never contact between the piston rod and the loading edge when loading trucks. The Knickmatik™ cylinder was deliberately placed on the left so it is protected from damage in case of a collision. The boom can be swiveled to both sides at fill digging depth.

HYDRAULIC HOSES

The hydraulic hoses on the working device are well protected by the boom, or are located snugly along the boom.

TRANSPORT

Because of the automatic swing brake, locking the upper carriage for transport is impossible to forget.

ERGONOMICS

Particular focus was placed on ergonomics in all models; for example, the blade lever offers an integrated travel speed controller. This feature makes leveling and digging much easier.

DISPLAY

Instrument display with tank level, operating hour counter and more. An optical signal for faulty functions.

XL SERVICE

WHAT DOES DAILY SERVICE COME DOWN TO?

Very simple: minimizing time and effort.

Downtimes and service costs are reduced overall.

To save time during daily service, easy access and combined service points are key elements. Only one key is needed for all locks.

The engine hood opens upward widely so daily inspection points are directly accessible or can be monitored through gauge glasses or, on most models, are already visible from outside. Direct fueling from canisters is easily possible at working height.

HIGH STANDARD

RIGHT FROM THE START, INSIDE AND OUT

ENGINE / FUEL SYSTEM

- Double air filter system
- Fuel filling ports at working height

UNDERCARRIAGE

- Rubber track, 230 mm wide (short pitch)

HYDRAULIC SYSTEM

- Pressure accumulator for emergency reduction
- Straight-ahead driving function
- Automatic swing brake (transport security)

SAFETY SYSTEM

- Engine safe-start device in left control console

WORK EQUIPMENT

- Additional control circuit up to end of dipperstick
- Cab/canopy-mounted working floodlight
- LUDV (load independent flow sharing) hydraulics

SAFETY CAB

- ROPS (Roll-Over Protective Structure)
- TOPS (TIP-Over Protective Structure)
- Weight-dependent adjustable comfort seat
- Safety belt
- Hydraulic pilot control with adjustable handrests
- Cab heating with windshield defroster
- Front windshield opening system with gas-dampened support
- Battery main switch
- 12 V connection
- Cabling for loudspeakers and antenna, radio plug-in compartment
- Side mirror
- Accelerator pedals
- Right window opens wide for optimum ventilation, visibility and communication
- Stow and store possibilities for tools, mobile phone and beverages

CANOPY

- ROPS (Roll-Over Protective Structure)
- TOPS (TIP-Over Protective Structure)
- Weight-dependent adjustable comfort seat
- Safety belt
- Hydraulic pilot control with adjustable handrests
- 12 V connection
- Accelerator pedals
- Lockable storage compartment under the operator's seat
- Stow and store possibilities for tools, mobile phone and beverages

GOOD OPTIONS

OPTIMIZE YOUR MINI EXCAVATOR FOR USE

- Crane lifting beam
- Weatherproof roof
- Rubber track, 230 mm wide (long pitch)
- Prepared installation for radio plug-in module (radio plug-in compartment, antenna, 2 loudspeakers)
- Theft prevention system
- Switches and cabling for rotating beacon
- Additional work headlight and rotating beacon
- Load hook
- Load-retaining valve
- Oil variants
- Protective grid
- Fire extinguisher
- Travel motion alarm

THE SCHAEFF ADVANTAGE

HOW DOES A MINI EXCAVATOR BECOME PART OF YOUR COMPANY?

Very simple:
with our additional services.

PAINTING SERVICE – SHOW YOUR COLORS

So one matches the other: we paint with exactly your company colors.

BrandIt® – THE SERVICE FOR YOUR LOGO ON THE MACHINE.

At Schaeff, your company takes a prominent place. Our engine hoods offer plenty of room for your logo and therefore, your market presence. As desired, with our support.

Talk about our BrandIt® service with your Schaeff partner.

FACTORY-APPROVED SPARE PARTS

WHAT KEEPS YOUR SCHAEFF MINI EXCAVATOR READY TO OPERATE OVER THE LONG TERM?

Very simple: the original.

Schaeff spare parts ensure sustainable performance and efficiency for your machine. Order processing and service are fast: Schaeff dealers can order over 100,000 parts, from safety belts and control components to axles and filter elements. More than 95 % of the parts are shipped within 24 hours.

Contact your local Schaeff partner.
There you will find further information and can order factory-tested spare parts.

COMPACT PORTFOLIO

MADE IN CRAILSHEIM

Manufacturing compact construction machines is our expertise and our great passion. We have dedicated ourselves to this task for over 75 years – over 30 of them at our Crailsheim, Germany, location.

Our ideas are part of the history of construction machines; for instance, the Knickmatik® or the top-mounted cylinder. And still today, our expertise dictates the market.
Our expertise pays dividends for our customers: through extremely productive and reliable construction machines.

Mini crawler excavators
10 models. Operating weights from 1.5 to 5.0 tons

Midi crawler excavators
4 models. Operating weights from 5.65 to 12.5 tons

Compact wheeled excavators
3 models. Operating weights from 7.4 to 11.0 tons

Compact wheel loaders
5 models, bucket capacities from 0.5 to 1.8 cubic meters

SPECIFICATIONS

ENGINE

Manufacturer, model	Kubota, D722 Tier 4 final
Type	3-cylinder diesel engine
Bore x stroke	67 x 68 mm
Displacement	719 cm^3
Power rating acc. to ISO 14396 @ 2500 rpm	10.4 kW (14.1 HP)
Torque max. @ 2000 rpm	43.5 Nm
Air filter with safety cartridge and maintenance switch	
Cold-starting aid	Glow plugs

ELECTRICAL SYSTEM

Nominal voltage	12 V
Battery	12 V / 44 Ah
Generator	12 V / 40 A
Starter	1.4 kW
Lighting system:	1 working floodlight front left on the cab / canopy (auxiliary headlamps optional)

TRANSMISSION

Single-stage hydrostatic travel drive with axial piston variable displacement motor and reduction gear, fully enclosed. “Straight-Travel” function. Travel brake valves for downhill travel

Travel speed, 1st gear	2.2 kph
Travel speed, 2nd gear (optional)	4.2 kph

Forwards and backwards respectively. Manual switching via button on dozer lever.

UNDERCARRIAGE

Torsion-proof welded design. Mechanically retractable/extendable undercarriage provided as standard. Maintenance-free crawler-type undercarriage. Idler suspension with hydraulic crawler-chain tensioning. Sliding plate at the top

Range of adjustment, outside edge of crawler chains	990 – 1340 mm
Width rubber tracks (short pitch)	230 mm
Total length (undercarriage)	1490 mm
Number of rollers per side	3
Track width	760 – 1110 mm
Gradeability	max. 60%
Drawbar pull 1st speed range	1300 daN

DOZER BLADE

Independent of drive train, sensitive control via separate hand lever

Width x height	1340 x 235 mm
Dozer cut below ground	160 mm
Dozer lift above ground	200 mm
Slope angle	25°

STEERING

Independent individual control of crawler chains, also counterwise. Sensitive actuation via manual levers, combined with pedals, foot rest on pedal console

SWING SYSTEM

Internally toothed ring gear

Swing speed	0 – 9 rpm

SWING BRAKE

Hydrostatic drive, also acts as wear-resistant brake. Additional spring-loaded multi-disc brake. Considered as transport security

FLUID CAPACITIES

Fuel tank	27 l
Hydraulic system (incl. tank 21 l)	26 l

KNICKMATIK®

Lateral parallel adjustment of boom arrangement at full dig depth	
Angle of articulation / lateral adjustment left	59° / 411 mm
Angle of articulation / lateral adjustment right	60° / 503 mm

OPERATING DATA, STANDARD EQUIPMENT

Operating weight according to ISO 6016: Cab with 400 mm bucket, quick-attach system, 1st additional control circuit, rubber tracks, including driver, full fuel tank	1650 kg
Operating weight according to ISO 6016: Canopy with 400 mm bucket, quick-attach system, 1st additional control circuit, rubber tracks, including driver, full fuel tank	1570 kg
Transport weight: Cab, tank half full, with quick-attach system, w/out bucket	1525 kg
Transport weight: Canopy, tank half full, with quick-attach system, w/out bucket	1445 kg
Total length (travel position)	2621 mm
Total length (trailer transport position)	3653 mm
Total height (top of canopy/cab)	2273 mm / 2291mm
Total height (travel position)	2315 mm
Total width (undercarriage)	990 – 1340 mm
Total width of uppercarriage	980 mm
Uppercarriage tail swing	1090 mm
Uppercarriage front swing	1295 mm
Working envelope, bucket heaped (also with 600 mm bucket):	
180°	2388 mm
360°	2596 mm
Swing clearance	443 mm
Reach max.**	3760 /3958* mm
Digging depth max.**	2260 /2460* mm
Loading height approx.**	2280 / 2430* mm
Highest reachable height**	3340 / 3483* mm
Bucket rotation angle	187°
Bucket digging force acc. to ISO 6015	16,590 N
Stick digging force acc. to ISO 6015	9750 / 8570* N
Specific ground pressure:	
Excavator cpl.	0.26 daN/cm^2

* with dipperstick 1150 mm (optional)

** Dimensions apply to machine standing on level ground, but can be increased by tilting the machine using the blade.

SPECIFICATIONS

HYDRAULIC SYSTEM

Pump capacity, max.	33 l/min
Working pressure	220 bar
Dual gear pump	
Load independent flow distribution (LIFD) for all working movements and travel drive	
Simultaneous independent control of all functions	
All excavator movements servo-controlled, ISO	
All functions are proportionally controllable	
Hydraulic oil cooler	
Full flow filtration through return filter	
Cylinders for boom, dipper arm and articulation with end position damping at both ends	
Bucket retract function with end-position damping	
Safety shutdown activated by exit barrier	
Additional control circuit as standard, control via foot pedal	
Additional control circuit with bypass for pressure-reduced return quantity	
Hydraulic power to the couplings:	
Pump capacity (pressure-controlled)	
@ 145 bar	33 lpm
@ 220 bar	21 lpm
Max. working pressure	220 bar

Diagram shows P/Q provided on couplers:

P/Q characteristic curve for additional control circuit 1 TC16-2

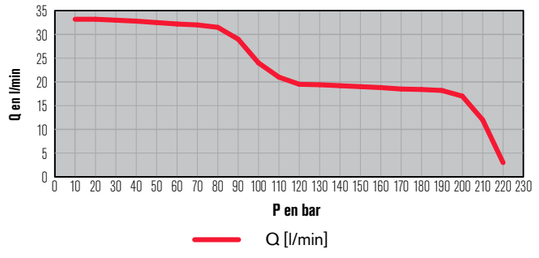

CAB (STANDARD)

Spacious, sound-insulated full-vision steel cab, FOPS*** (acc. to ISO 3449), ROPS and TOPS (acc. to ISO 12117) certified
Very good all-round visibility, lean vertical support members
Safety glass
Front window supported by pneumatic springs, slidable under cab roof
Fixed window part without frame which obstructs the forward view
Door with large access on left hand side
Foldable console on left hand side for large entry access
Right door as emergency exit
Matching locks of hood, ignition and tank cap
Central connector for electrical cable
Wiper washer with wiper for windscreen
Interior light, coat hook
Operator’s seat (standard version), imitation leather: Longitudinal and back tilt adjustment Continuous weight adjustment as per operators weight Safety belt
Armrests height adjustable without tools
Cables for radio installation kit
Preparation for antenna
Large storage compartment under the operator’s seat
Heating (water) with 2-speed fan and 4 adjustable exhaust nozzles
Temperature controller in cab
Storage pocket behind the operator’s seat
Storage compartment for mobile phone (near 12V outlet)
1 left-hand outside rear-view mirror, foldable in front of windshield
1 working floodlight front left as standard
Display, fuel gauge, hour meter and warning lights
Fuse box easily accessible from outside of the cab
Very good ergonomics
Ergonomically arranged dozer blade lever
Fast / slow switch on dozer blade lever (optional)
Schaeff ‘Fingertip’ control for additional control circuit on right joystick, including holding function for continuous operation (optional)
Yellow beacon, radio, immobilizer (anti-theft device), working floodlights prepared for optional installation
*** FOPS-approved only with skylight guard (optional)

CANOPY

Robust steel pipe construction. 4 support members for the best all-round visibility
1 working floodlight front left
FOPS (acc. to ISO 3449), ROPS and TOPS (acc. to ISO 12117) certified
Operator’s seat (standard version), imitation leather: Longitudinal and back tilt adjustment Continuous weight adjustment as per operators weight Safety belt
Large lockable storage compartment under the operator’s seat
Storage pocket behind the operator’s seat
Display, fuel gauge, hour meter and warning lights
Easy and quick change of canopy to cab and vice-versa (< 1 hour)
Yellow beacon, immobilizer (anti-theft device), working floodlights prepared for optional installation
Reduction weight canopy 80 kg

CRANE TRANSPORT

Crane lifting beam for cab and canopy

SOUND LEVEL VALUES

Noise emission ambience L_{WA} cab / canopy	93 / 93 dB (A)
Noise emission cab L_{pA} cab / canopy	79 / 79 dB (A)
Sound level values measured in compliance with Directive 2000/14/EC and EN474	

VIBRATION VALUES

Effective values of acceleration for whole body	less than 0.5 m/s^2
Effective values of acceleration for hand-arm	less than 2.5 m/s^2
Vibration values in compliance with Directive 2006/42/EC and EN474	

WORKING RANGES & DIMENSIONS: MONOBLOC BOOM

TC16₂

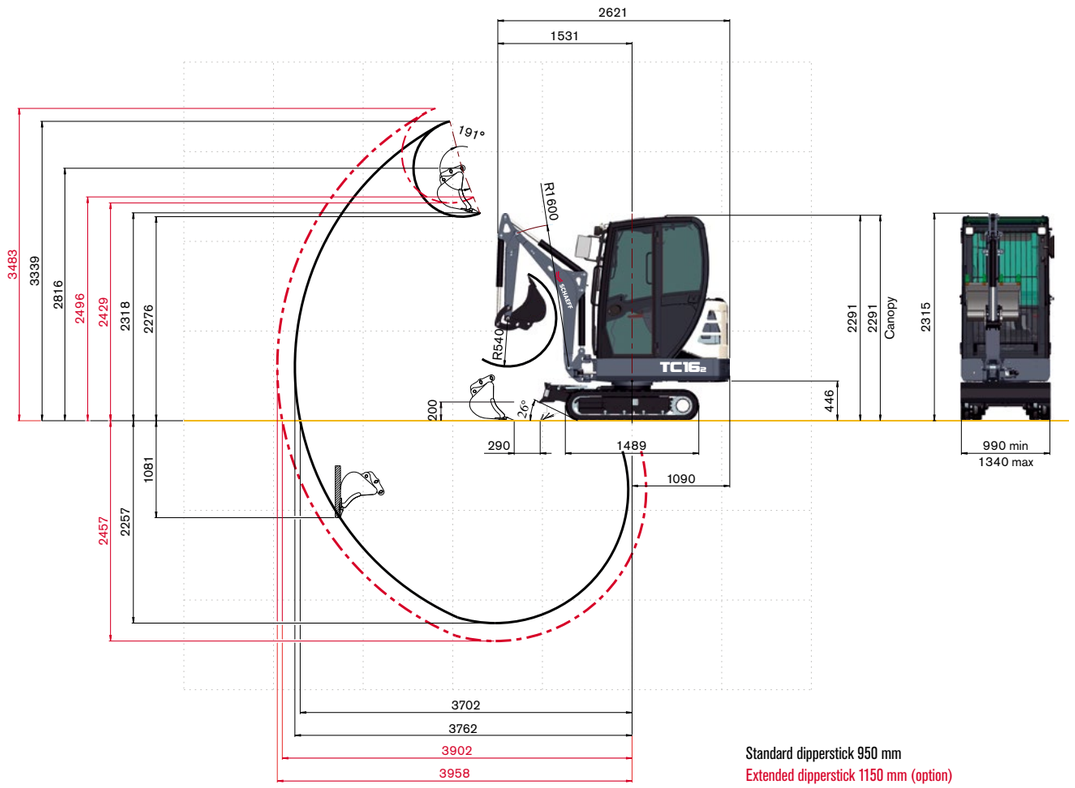

Standard dipperstick 950 mm
Extended dipperstick 1150 mm (option)

LIFTING CAPACITIES

Bucket hinge height		Load radius from center of ring gear																			
Dipperstick 950 mm		1.5 m				2.0 m				2.5 m				3.0 m				3.25 m			
		UR	UE	UR	UE	UR	UE	UR	UE	UR	UE	UR	UE	UR	UE	UR	UE	UR	UE	UR	UE
2.0 m		-	-	-	-	0.57	0.57	0.45	0.45	0.36	0.36	0.26	0.36	0.33	0.33	0.21	0.29	-	-	-	-
		-	-	-	-	0.44	0.44	0.44	0.44	0.33	0.33	0.26	0.36	0.20	0.20	0.20	0.29	-	-	-	-
1.0 m		0.80	0.80	0.50	0.86	0.53	0.53	0.35	0.57	0.43	0.43	0.24	0.36	0.35	0.35	0.18	0.27	0.32	0.32	0.17	0.24
		0.76	0.76	0.48	0.86	0.50	0.50	0.34	0.57	0.30	0.30	0.24	0.35	0.23	0.23	0.18	0.26	0.21	0.21	0.16	0.23
0.0 m		0.90	0.90	0.47	0.64	0.62	0.62	0.30	0.45	0.44	0.44	0.23	0.34	0.32	0.32	0.18	0.26	0.28	0.28	0.17	0.29
		0.57	0.57	0.44	0.64	0.39	0.45	0.30	0.44	0.29	0.29	0.22	0.33	0.22	0.22	0.17	0.26	0.21	0.21	0.16	0.23
-0.75 m		0.68	0.68	0.41	0.79	0.50	0.50	0.29	0.51	0.35	0.35	0.22	0.37	0.26	0.23	0.18	0.23	-	-	-	-
		0.56	0.56	0.39	0.77	0.38	0.39	0.29	0.51	0.28	0.28	0.21	0.37	0.26	0.23	0.17	0.23	-	-	-	-

Bucket hinge height		Load radius from center of ring gear																			
Dipperstick 1150 mm		1.5 m				2.0 m				2.5 m				3.0 m				3.25 m			
		UR	UE	UR	UE	UR	UE	UR	UE	UR	UE	UR	UE	UR	UE	UR	UE	UR	UE	UR	UE
2.0 m		-	-	-	-	-	-	-	-	0.29	0.29	0.23	0.28	0.33	0.33	0.20	0.31	-	-	-	-
		-	-	-	-	-	-	-	-	0.28	0.28	0.23	0.28	0.23	0.23	0.20	0.31	-	-	-	-
1.0 m		0.77	0.77	0.49	0.75	0.46	0.46	0.44	0.45	0.38	0.38	0.26	0.38	0.33	0.33	0.19	0.26	-	-	-	-
		0.56	0.56	0.49	0.75	0.42	0.42	0.44	0.45	0.30	0.30	0.26	0.38	0.23	0.23	0.19	0.26	-	-	-	-
0.0 m		0.85	0.85	0.50	0.68	0.60	0.60	0.34	0.46	0.44	0.44	0.24	0.33	0.32	0.32	0.19	0.26	0.25	0.25	0.17	0.24
		0.54	0.54	0.49	0.68	0.38	0.38	0.34	0.45	0.29	0.29	0.24	0.32	0.21	0.21	0.19	0.24	0.18	0.18	0.16	0.24
-0.75 m		0.70	0.70	0.45	0.76	0.54	0.54	0.32	0.52	0.38	0.38	0.24	0.38	0.23	0.23	0.19	0.25	-	-	-	-
		0.52	0.52	0.44	0.72	0.38	0.38	0.32	0.52	0.26	0.26	0.23	0.38	0.23	0.23	0.19	0.24	-	-	-	-

All values in tons (t) were determined acc. to ISO 10567 and include a stability factor of 1.33 or 87% of the hydraulic lifting capacity. All values were determined with quick-attach system but without bucket. In case of mounted-on work attachments, the deadweights of the work attachments must be deducted from the permissible operating loads
Working equipment: Rubber tracks
Abbreviations: UR = Undercarriage retracted, UE = Undercarriage extended

DIMENSIONS

Fig. 1, 2:
Excavation within the entire width of the machine

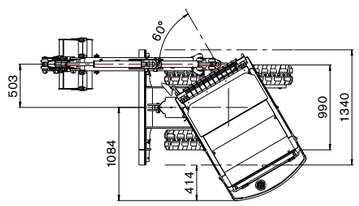

Fig. 3:
Transport position - trailer transport

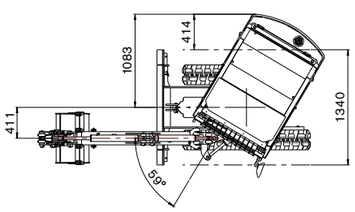

Fig. 4:
Working envelope

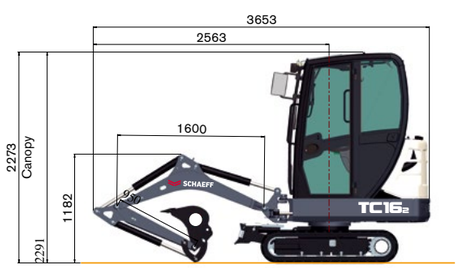

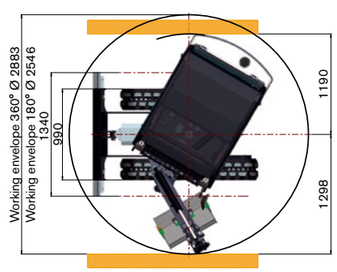

WORK ATTACHMENTS

BUCKETS

Bucket, QAS	250 mm wide, capacity 21 l, 27 kg
Bucket, QAS	300 mm wide, capacity 26 l, 30 kg
Bucket, QAS	400 mm wide, capacity 37 l, 35 kg
Bucket, QAS	500 mm wide, capacity 48 l, 41 kg
Bucket, QAS	600 mm wide, capacity 59 l, 46 kg
Ditch-cleaning bucket, QAS	1000 mm wide, capacity 91 l, 79 kg
Swing bucket, QAS	1000 mm wide, capacity 49 l, 79 kg

GRABS

Clamshell grab GL 1250, grab swing brake	set of shells 250 mm wide, capacity 45 l
Ejector	

OTHER WORK ATTACHMENTS

Hydraulic hammer	Cutting unit
Augers	Quick-change adapter for hydraulic hammer
Bolt-on load hook for bucket rod	Further work attachments available on request

OPTIONAL EQUIPMENT

CRAWLER CHAIN OPTIONS

Rubber tracks (long pitch), 230 mm wide

UNDERCARRIAGE

Hydraulically retractable/extendable undercarriage (990 – 1340 mm)

BOOM

Monobloc boom, with extended dipperstick 1150 mm

TRANSMISSION

2nd gear, travel speed 0 – 4.2 kph

HYDRAULIC SYSTEM

Schaeff 'Fingertip' control (electro proportional) for additional control circuit for work attachments on right joystick, including holding function for continuous operation, actuation via rollers	Schaeff 'Fingertip' control (electro proportional) incl. second additional control circuit on left joystick, including holding function for continuous operation, actuation via rollers
Hose-rupture / load-retaining valves for boom and dipperstick cylinders	Biodegradable hydraulic oil / ester-based HLP 68 (Panolin)
Quick couplings for control circuit for work attachments (hammer hydraulics) incl. open return	Supplementary set "Clamshell grab opening / closing", without quick couplings, for standard dipperstick
Quick couplings for 2nd additional control circuit	Quick couplings for supplementary set "Clamshell grab opening/closing"
Fast / slow switch on dozer blade lever	

OPERATOR'S STAND

Operator's seat (standard version), textile cover

CAB

Rain guard	FOPS - skylight guard
Lighting package: Cab-mounted working floodlight front right and rear right, boom-mounted working floodlight, yellow beacon	Radio set installation kit (speakers)
Fire extinguisher, ABC powder 2 kg	

OTHER OPTIONAL EQUIPMENT

Mechanical quick-attach system	Crane lifting gear
Quick-attach system, mechanical (genuine Lehnhoff system), type MS01 or MS03	Safety package: hose-rupture / load-retaining valves for boom and dipperstick cylinders, fire extinguisher, immobilizer, motion alarm
Back-up alarm, signal-horn (can be switched off)	Special colour options
Immobilizer, transponder key	
Further optional equipment available on request	

SCHAEFF
A YANMAR BRAND

Yanmar Compact Germany GmbH
Kraftwerkstrasse 4
74564 Crailsheim, Germany

www.schaeff-yanmar.com

01.01.2017 · All figures and data can differ from the standard design. Subject to change without notice.